© INTERNATIONAL JOURNAL FOR RESEARCH PUBLICATION & SEMINAR
ISSN: 2278-6848 | Volume: 09 Issue: 03 | April - June 2018
Paper is available at www.jrps.in | Email : info@jrps.in

"A Review on Screw Conveyor using different coating materials"

Rehan Khan[1], Prof. H.S Sahu[2]
M.Tech (Machine Design, Millennium Institute of Technology, Bhopal)
M.Tech (Department of Mechanical Engineering, Millennium Institute of Technology, Bhopal)

Abstract— Nowadays in industries it is very necessary to use material handling system for to move material from one place to another place continuously to minimize operation time. Various conventional conveyor systems like belt conveyors, bucket elevators, screw conveyors, pneumatic and vibratory conveyors, and roller conveyor system are used in industry, like food, chemical, plastic, material processing industry. In our case, selected industry being run on small scale certainly have limitations to adopt these conventional material handling systems to convey the powders economically and precisely.

Screw (Auger) conveyors are widely used for transporting and/or elevating particulates at controlled and steady rates. They are used in many bulk material applications in industries ranging from industrial minerals, agriculture, chemicals, pigments, plastics, cement, sand, salt and food processing. They are also used for metering (measuring the flow rate) from storage bins and adding small controlled amounts of trace materials such as pigments to granular materials or powders. Many studies on screw conveyors were conducted to examine performance

Keywords- Conveyor system; screw conveyor; Finite element analysis;.

I. INTRODUCTION

Screw conveyors are very effective conveying devices for free flowing or relatively free flowing bulk solids, giving good throughput control and providing environmentally clean solutions to process handling problems because of their simple structure, high efficiency, low cost and maintenance requirements. A screw conveyor consists essentially of a shaftmounted screw rotating in a trough and a drive unit for running the shaft. The material is moved forward along the axis of the trough by the thrust of screw thread or flight. The trough is usually of the U-shape. The basic principles of operation may be explained with reference to Fig.1.1. A helical blade is attached to a drive shaft which is coupled to a drive unit. The shaft is supported by end bearings, and intermediate bearing. The U-shaped trough has a cover plate with an opening for loading the conveyor. A discharge opening is provided at bottom of the rough. The loading and discharge points can be located anywhere along the trough. More than one feed hopper and discharge hopper may be fitted according to the necessity.

ISSN : 2278-6848
03
9 772278 684800
© International Journal for Research Publication and Seminar

The basic principle of material along the trough is similar to the sliding motion of a nut along a rotating screw when the nut is not allowed to rotate. The weight of material and the friction of the material against the wall present the load from rotating with the screw.

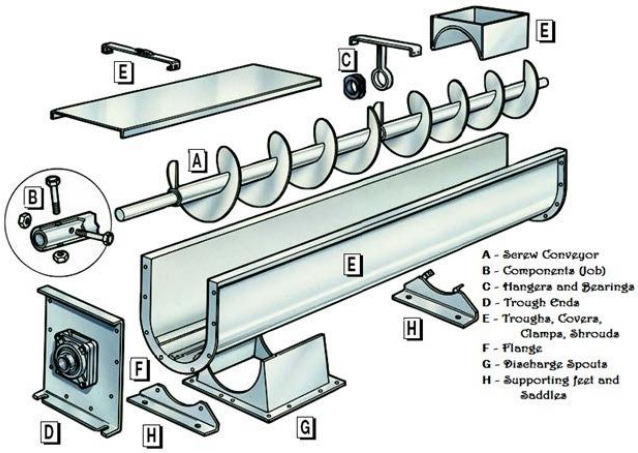

Fig 1.1-Screw conveyor

There are three major components in flange connection they are flange, gasket and bolts and nuts. Gaskets are used to protect from leakage, also for preventing wearing of flanges. Pipe flanges are manufactured with dimensions provided by the customer or they are manufactured according to published specifications such as ASME or ANSI standards. Flanges are affected by the varying forces, pressure, temperature and an environmental effect because of which leakages occurs in the connection. So sealing of a connection must be analyzed. T.Sawaet conducted sealing

performance of flange joints using axis symmetric three dimensional theory of elasticity approach.

II. LITRETURE REVIEW

Bepariya Keyur et al 2018 performed investigation on new machine rather than old machine for material handling purpose. The main purpose of the author in the present study is to utilize the land and it space in such a way that it can full fill the all requirement of the manufacturing process in which the material such as soaps biscuits wafers can be transfer from manufacturing area to storage area at higher level with efficient out by using the screw conveyor as a material handling system.

Panchal Prit et al 2017 investigated about the present scenario of the industries and its drainage system such that it is the major problem which cause the pollution and leads to bad impact on biological life and this leads to the enhancement of the global warming. Author also explained the drawbacks of drainage pipe as it sometimes result as loss of human life. To overcome all the related problem author investigated the automated system using screw conveyor which can clean the waste named as "Automatic waste Cleaning System by screw conveyor" and also constructed the prototype of the present suggested system.

Amudha.K 2017 represented the experimental analysis of the screw conveyor and performed a review on the performance of the screw conveyor under various operating conditions. In the investigation the author found that with different flow rates and feed rate there was no change in mass flow of the material. It was also observed the nodule output about 8.6 kg/rotation. In the study screw feeder operation took place for 150meter depth with mass loss of 14% due wash away of finer particles. It was concluded that the design was validated in trials in sea for higher depth about 6000 meter depth.

Olanrewaju T. O. et al 2017 performed experimental analysis on the screw conveyor for grains with inclination of 0°, 30° and 45° respectively. In the experimental analysis he found that for maize the average capacity of the screw conveyor was 407.05, 282.4 and 263.1 kg h-1 in case of gari the capacity of the screw conveyor was 460.0, 365.3, 310.0 kg h-1 and in case of sorghum the average capacity of the screw conveyor was, 450.2, 350.5, 263.0 kg h-1.With al, the output author concluded that screw conveyor with inclination provided 99.95% efficiency in case of handling the granules.

Michael Rackl 2016 investigated the design parameters of the screw conveyor mass flow and driving torque for three grades of wood chips and two blends of wood chips. As a result it was found that one of the chip grade recoded high torque rate ie twice of the another and one get jammed. The result concluded that the blending of the wood chips can reduce the jamming to desirable rate.

Marianna Tomašková 2014 explained the complete working of the screw conveyor and the various design of the system which are utilized across the world for getting the best efficiency in material handling purpose. In the research paper also discussed about the various risks and drawbacks associated with use of screw conveyor for material handling purpose.

Jigar N. Patel 2013 represented the modification of the Auger in order to attain same output with small size and less power consumption. In the investigation author proposed the screw conveyor without shaft for conveying the cement with capacity of 2t/h. As a result it was found that screw conveyor are capable of conveying the material in inclination but its capacity decrease with increase in inclination angle.

III. OBJECTIVE

The major objective of the present research work is to determine the effect of various types of force and deformation present generally in screw conveyor. And study the various type of parameter and component of screw conveyor.

IV. THEORETICAL METHOD AND REVIEW

A. SCREW CONVEYORS THEORETICAL FORMULA

The theoretical volumetric capacity of a screw auger is expressed as:

$$Q_t = \frac{\pi}{4}\left(D_{sf}^2 - D_{ss}^2\right) l_p n,$$

Where,

Q_t = theoretical volumetric capacity, m3 s -1

D_{sf} = screw flighting diameter, m

D_{ss} = screw shaft diameter, m

l_p = pitch length, m n = screw rotational speed, rev s -1

In reality the actual capacity of an auger is considerably less than the theoretical capacity. This results in loss of volumetric efficiency. The volumetric efficiency is defined as:

$$\eta_v = \frac{Q_a}{Q_t},$$

Where,

ηv = volumetric efficiency

Qa = actual volumetric capacity, m3 s -1

Generally, the throughput rate in terms of mass (or weight) per unit of time, for example t h-1 or kg min-1 , is specified. The volumetric capacity is obtained by dividing the throughput rate by the bulk density of the material. The power requirement of an auger is expressed by the specific power, defined as:

$$P_s = \frac{P/L}{Q_a \rho_b},$$

Where,

Ps = specific power, W s kg-1 m-1

P = power requirement, W

L = screw length, m ρb = material bulk density, kg m-3

B. SCREW CONVEYOR PERFORMANCE

The performance of a screw conveyor, as characterized by its capacity, volumetric efficiency, and power requirements, is affected by the conveyor geometry and size, the properties of the material being conveyed, and the conveyor operating parameters such as the screw speed and the angle of inclination. The screw conveyors performance could be also specified considering the extent of grains damage when handling by the helical flighting.

C. Modeling

Modeling generally refers to a process in design which employs mathematical representation of model for 3D Surface of a model. There are various tools used for the modeling purpose in design industry, CATIA V5 R20 which is one of them is used for the modeling screw conveyor in this research work.

D. Finite Element Analysis

The finite element analysis is a numerical method for solving problems of engineering. It is traditionally a branch of Solid Mechanics. Most common areas of interest are, Structural Analysis, and Mass Transport. For the designed Pistons it is a must to compare the performance of both pistons and for this purpose ANSYS 15 is used as FEA tool. ANSYS 15 is software used for solving a number of mathematical problems.

Finite Element method divides the structure into a number of finite elements and these elements are bridged with the help of nodes. The elements are chosen after study of the response and geometry of analyzed component. The results which are obtained by post analysis procedure depend on the mesh size. ANSYS Workbench provides potent, practical applications which simplifies the process of mesh generation, decreases the design cycle time, reduces the number of prototype production and testing, thus helps providing an optimum design.

The Process of Analysis is divided in following steps;

1. Pre-Processing
2. Solver
3. Post-Processing

V. EXPECTED OUTCOME

The literature survey shows, that most of the problem is present in screw conveyor's material. So it will be easily identified the best suited material which can bear maximum stress and lower deformations.

VI. COUNCLUSION

Where screw augers performance has been studied in conveying and transport of agricultural materials, the efforts have focused on agricultural grains (e.g., corn, wheat, oats), free-flowing and fibrous materials. Performance characteristics, e.g., screw rotational speed, transport angle and conveyor diameter, have been investigated, both for inclined and horizontal conveying.

From above study we found that the main issue concerned in all explanations is the flow pattern of a moving material and power consumption at different speed and pitch and diameter ratio. When material is transferred from the inlet to the outlet, the flow pattern of material particles is very difficult to examine. Clear understanding of the material particles flow pattern inside the screw coil is required for further investigation. So from above survey it is possible to predict performance of screw conveyor using finite element method (FEM). So for further, investigation on performance and flow pattern of stress and deformation does use Finite Element Analysis to get better understands.

VII. REFRENCES

1. Meiqiu Li, Jingbo Luo, Bangxiong Wu, Jian Hua (2018) "Experimental research of the mechanism and particle flow in screw conveyer" International Journal of Heat and Technology Vol. 36, pp. 173-181

2. Amudha.K, Ramesh N.R., Sundaramoorthi.V , Dineshkumar .D ,Muthuswamy.V, Rethnaraj.T , G.A.Ramadass (2017). "Performance tests on Screw Feeder Conveyor for Nodule Transfer Deep Sea Applications", International Journal of Advanced Engineering Research and Science (IJAERS) Vol-4, Issue-3

3. Olanrewaju T. O., Jeremiah I. M., Onyeanula P. E (2017). "Design and fabrication of a screw conveyor" AgricEngInt: CIGR Journal Open access Vol. 19, No. 3

4. Sanket Patil, Shashank Saoji, Ajinkya Shahane, Pratik Phadatare (2017). "Design and Analysis of Twin Screw Conveyor" International Conference on Ideas, Impact and Innovation in Mechanical Engineering ISSN: 2321-8169 Volume: 5 Issue: 6

5. Prasanna, Sharanabasappa, Vishwanath B R, Kishore (2016). "Design and Fabrication of Cam Operated Coveyor for Spherical Components Transporation" IJSRSET | Volume 2 | Issue 6 | Print ISSN: 2395-1990 | Online ISSN: 2394-4099

6. Mohammad Zahed Raza, Prof.K.R.Sontakke, Prof. I.A.Quazi (2016). "A review and design of spiral aerator for earthen making process" International Journal of Research in Advent Technology (IJRAT) (E-ISSN: 2321-9637

7. Evstratov V.A., Rud A.V., Belousov K.Y (2015) "Process modelling vertical screw transport of bulk material flow" ScienceDirect, Procedia Engineering 129 P.no. 397 – 402

8. Patil. S. S., Jadhav S. M (2015): "Design of Screw Feeding System with Shaft less Fights Bending Analysis in Earthen Pot Making Equipment", International Engineering Research Journal (IERJ), 1(2), pp. 972-975.